Electronics Documentation

1. Electronics Block Diagram

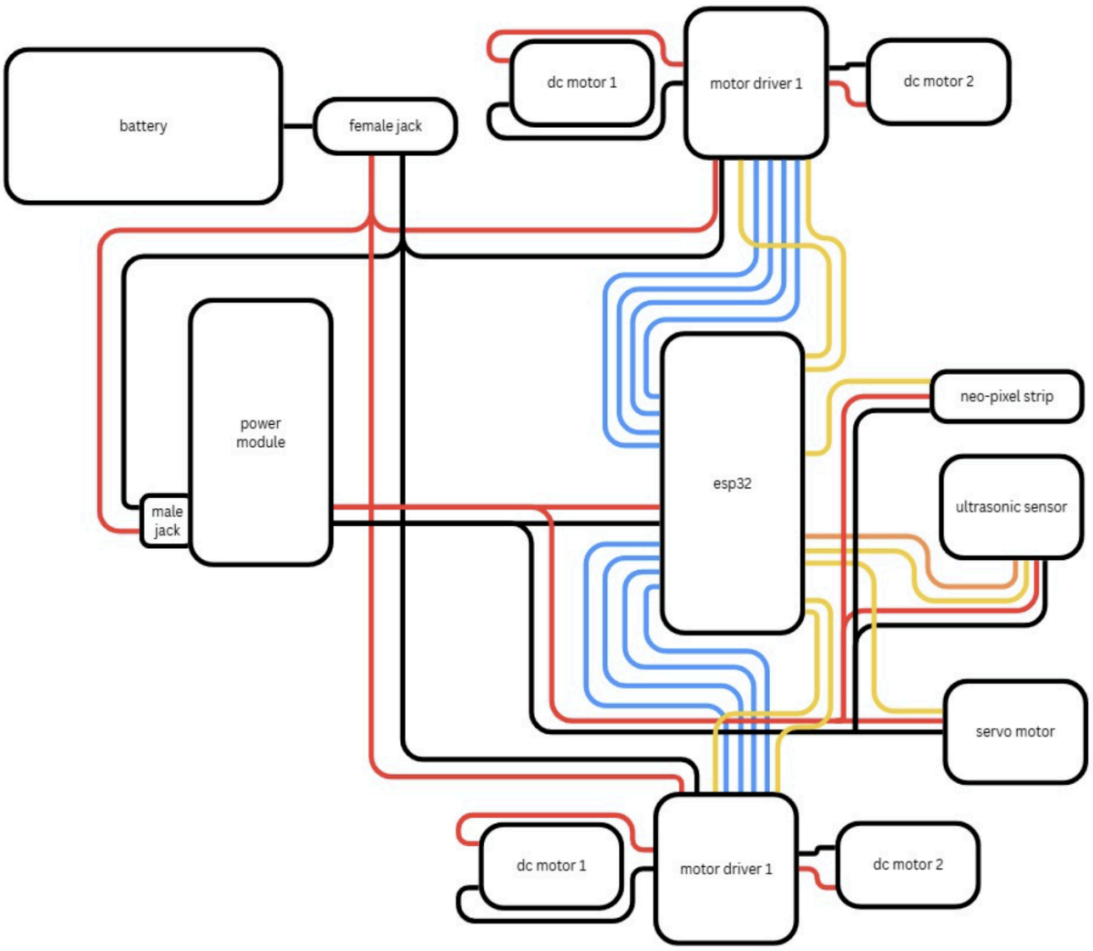

2. Components Table

Component	Qty	Function	Justification
DC Motor	4	Drives each wheel to enable vehicle movement.	Provides continuous rotation and supports variable speed control using PWM signals.
Servo Motor	1	Rotates the ultrasonic sensor horizontally.	Enables precise angular movement (10°–170°) for wider environmental scanning.
Ultrasonic Sensor	1	Detects obstacles by measuring distance.	Allows non-contact distance measurement, essential for obstacle detection and navigation.
NeoPixel Strip	1	Displays visual status of the vehicle.	Uses color-coded feedback to represent different states, making system behavior easy to monitor.
ESP32	1	Controls and executes all system operations.	Integrates processing with Wi-Fi and Bluetooth, managing inputs and outputs efficiently.
Power Supply Module	1	Regulates and distributes stable 5V power.	Ensures consistent voltage supply to components like sensors, LEDs, and motors.
Physical Switch	1	Turns the system on or off manually.	Provides immediate power cutoff for safety and battery conservation.
Power Rail	1	Distributes 5V and GND connections to multiple components.	Compact and practical solution for shared power distribution in limited space.
Battery	1	Supplies power to the entire system.	Provides required voltage (3V–7.4V), which is regulated to meet component needs.